Technical & Spiritual

Manual for post-apocalyptic radio making

SI22: Signal Lost

XPUB

Contents

Preface 1

Part I 2

The “How” 2

Radio circuit 2

How to make a transmitter 3

How to make a receiver 4

Part II 14

The “Why” 14

Interview I: Lukas Simonis 15

Interview II: Ash Kilmartin 20

Interview III: Lieuwe Zelle 30

Interview IV: Florian Cramer 35

Epilogue 43

Appendix 44

Fragmented Tools 45

Archiving Nature: The Case of the Rain Receiver 48

On Nothingness, Un-archiving & Loss 49

Colofon 53

Preface

So, you made it through the end of it all and emerged triumphant from the ashes of the world and its archives. You must be confused and scared, disoriented and lost. Even if you have a computer, there is probably no internet to connect to and, if you have a phone, there is no network. How will you get in touch with the rest of the world, if indeed there is anyone? Radio is the answer: A resilient and relatively easy to build means of communication that will not only potentially save your life and assist you in your search for the remains of civilization, but will also become your tool for building a new world through the dissemination of protocols, ideas, ideals and, of course, good music.

This is a guide on how to start making radio again from scratch (Part I) and why this is important, based on the salvaged testimonies of pre-apocalyptic radio makers of the legendary Radio WORM (Part II). May their words guide you!

In the appendix you will find useful radio making tools and work developed by the XPUB team revolving around archiving, protocols and radio making. Their purpose is to make your life easier and enrich it in bleak post-apocalyptic times.

XPUB November 2023, Rotterdam

Part I

The “How”

In your practical search for signs of intelligent life and communication you will need two things: A radio transmitter and a radio receiver. These will boost your chances of survival through finding or creating a community.

Radio circuit

Radio is the reception of electromagnetic wave through air. Radio waves are transmitted either by modulating the amplitude (AM) or the frequency (FM). FM signals are more stable than AM and, since your life after the apocalypse depends on it, this manual focuses on FM.

The basic principle of radio making is converting the frequency of radio waves into sound, receiving and decoding them. To transmit data you must modulate the frequency (i.e. change the property of the message signal) at the transmission and demodulate it at the receiver side. The FM signal, that was cluttered during the late pre-apocalyptic times mostly with commercial junk, has a frequency range of 87.5MHz to 108.0 MHz. The output can be heard through a speaker.

How to make a transmitter

Necessary components

- **Power supply**: Provides the necessary electrical power to operate the transmitter.
- **Oscillator**: Creates alternating current at the frequency on which the transmitter will transmit (the carrier wave).
- **Modulator:** Adds useful information to the carrier wave. If you use frequency modulation to do so (FM) you make slight increases or decreases in the frequency of the carrier wave.
- **Amplifier:** Amplifies the modulated carrier wave to increase the power of the broadcast.
- **Antenna:** Converts the amplified signal to radio waves.

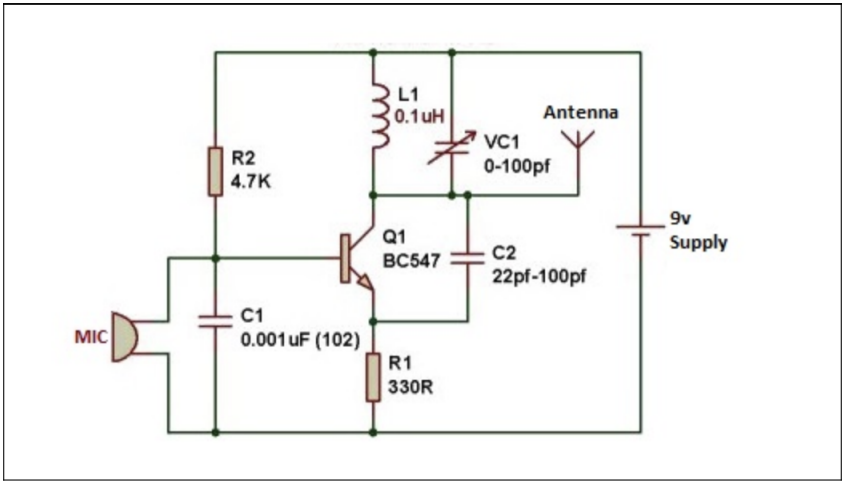

Diagram: FM transmitter circuit

How to make a receiver

Necessary components

- **Antenna:** (eg. a piece of wire) to capture the radio waves.
- **RF amplifier:** Amplifies the weak radio frequency (RF) signal from the antenna in order for the tuner to process it.
- **Tuner:** A circuit (coil + capacitor) that can extract signals of a particular frequency (resonant frequency). Without it, the antenna captures all radio waves, which are then collectively amplified by the amplifier.
- **Detector:** Responsible for separating the audio information from the carrier wave.
- **Audio amplifier:** A circuit that amplifies the signal coming from the detector.

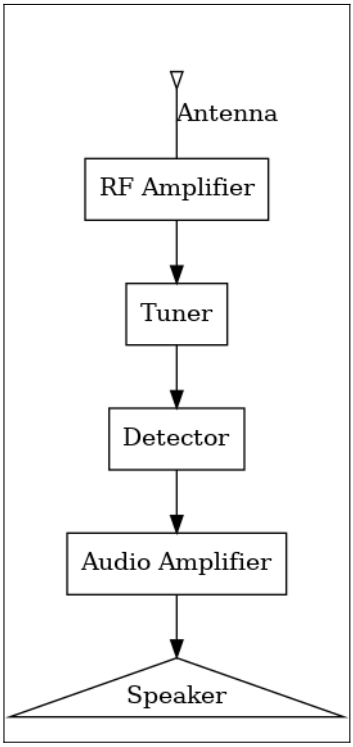

Happy radio wave hunting!

worm bel
A+
B+
A
B
SELECT
START

LUCID EXPRESS
DORPS STRAAT3

LorenzoQuestionnairerasure for the Wormpocalypse (Wordhole)

<i> Questionnairerasure

Are worm a space a radio and a place and more

I listen in / to worm

I go out I listen I read and I archive. Through the pipeline |

can't keep anything that is clutter but need to keep the importance and dance.

not the snake, am the wormoborous the community that feeds on ourshelves.

Leave the archive as to what is important rather than imported. leave files

And will come around and eat the cookies the crumbs lost. !important

Use the space for the next to continuity in unity of the worm

Prepare for leaving but never for farewell. Say goodbye to what you usen't.

Is het kunst of kan het weg?

meaning

Is it art or can it be thrown in the trash

Can we empty the bin

In order to begin where our wormhole left us

If moved from here to there to then from now

What is taken

What is taken into consideration

In what state is the open city, In which state lies it and how do you leave it

The space as the wormhole through the wordhole takes us into the active archivalry.

The physicality contradicts the practicality, being pragmatic of fragments

Being pragmatic over the roots of the space into the data trees

What can be erased? In order to digest, what is there

It should be clear, or cleared or ´klaar´ which means done

You can store it elsewhere but that isn't viable over the long run, worms don't run, they crawl and feed on what is there.

This is no calling for to be sterile or a vote for marie kondo, please kondon't, but only the wormunity can understand what needs to be kept

Who are the worms, do they want to keep everything?

Are they capable of leaving recordings behind?

Is it a doom scenario to delete stuff to remain active in archive

Or does cluttering / hoarding / keeping storage in servers and clouds fit the idea or the worm

Will the worm be worn out because of the ecological ideas of the worm

The worm can't proceed while being stuck, the worm needs to crawl in order to move, to breathe through the space, how does the worm think of using the space,

How do you conserve if conservation can harm the soil, maybe digging a bit too deep in these old gardened graveyards but if we wish to make an apocalyptic doomsday protocol, we must show tough love about the institution of the open city. How do we maintain traffic in a city if the city is blocked and clogged?

Making the worm accessible and open implies that space is made. In what order does the worm make space for achieving an active archive rather than proceeding as the hoarding worm.

Consider this an open call for an open city, an open space for an open mind where questions are open food for thought that the worm can digest again and let its excrements be dissolved in the past. </i>

These 3D renditions of the Radio WORM studio contrast the empty studio with all the invisible audio data, the endless stream of radio shows, stored on WORM's hard drive.

What do we do with all this invisible digital data and how do we prevent it from getting "dusty"?

This is the most important space for the community of radio makers

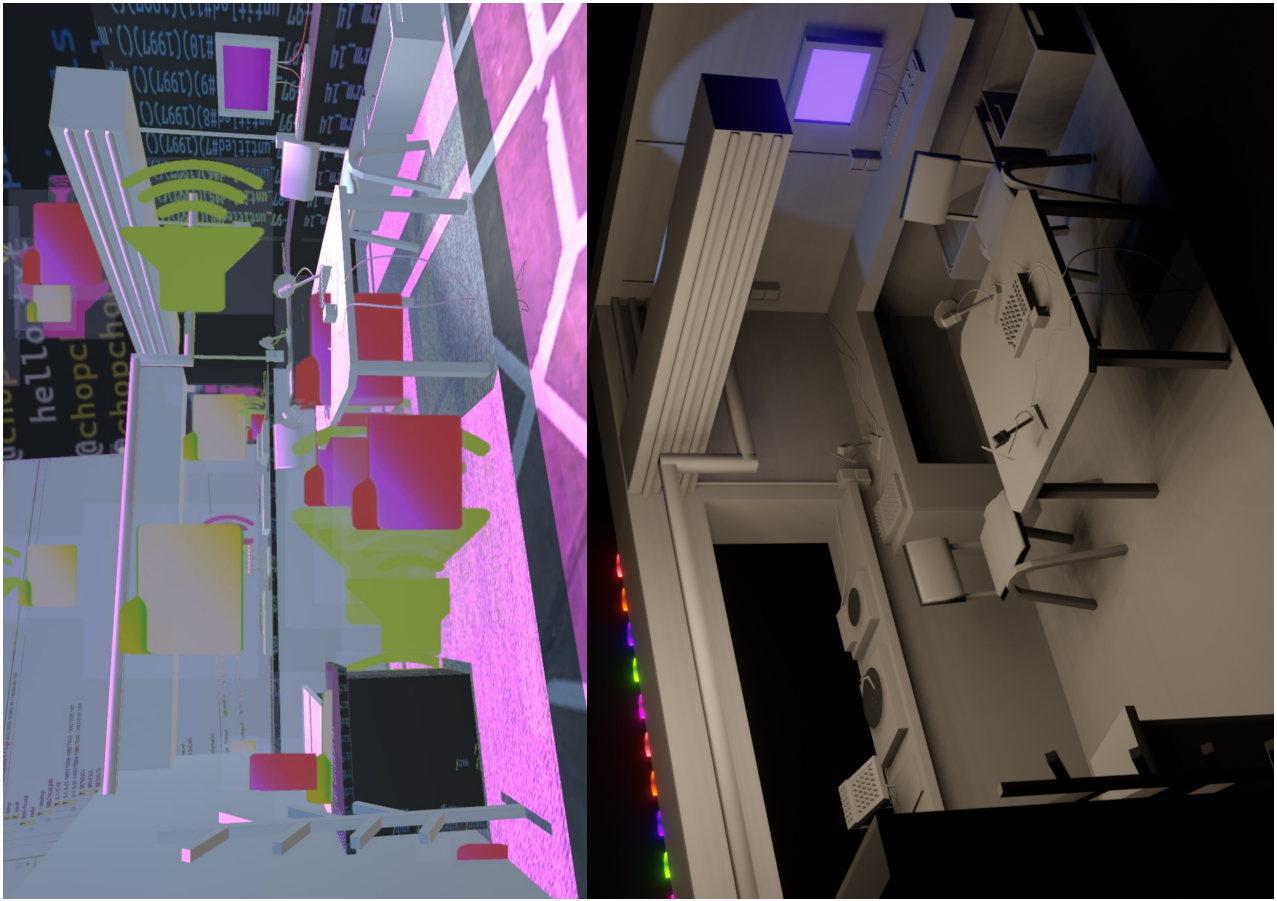

Byte Noise: Sound you see me? Sound you don't (work under construction) by Lorenzo and Senka

MUDDY WATERS
Verdwijnen in een toon

Part II

The “Why”

In order to navigate in the uncertain future, you can build on the wisdom of the past.

Since the COVID pandemic (a sort of apocalypse in itself) and up to the apocalypse you just experienced and survived, Radio WORM — situated in the cultural space once known as WORM, in Rotterdam — was the home of a vibrant community of passionate radio makers, hosting diverse shows with unique content. The wise words of some prominent members will guide you in this journey of exploration and (re)discovery as a sort of spiritual manual against the perpetual question: “When the world is burning, is radio a good idea?”

These voices come to you in the form of transcribed interviews — a famous method of archiving, with Socrates’s being one the most famous transcribed voices of all pre-apocalytpic time — and will help you in the post-apocalyptic sowing of the radio seed. These interviews were broadcasted live and recorded on the Radio WORM studio on 07/11/2023, and transcribed shortly after with the assistance of Otter.ai. This was part of the broader XPUB experimentation with archival practices and sound, driven by a vague and ambivalent feeling that the world as we knew it was about to end. These transcripts were minimally edited in order to transfer the element of “liveness” that is prevalent in radio making and to honor the centrality of the idea that error is essential to the process. In this process, from broadcast to interview to transcript to publication, all the students of XPUB1 2023 were involved.

Interview I: Lukas Simonis

Could you please introduce yourself?

I'm Lukas Simonis. I'm one of the people that couldn't leave WORM since we started it. And I've done several jobs during the 23 or 24 years that we exist. One of them is doing The Sound Studio. At the moment I'm even doing some music program, a job that I quit in 2008. But it's stuff comes back sometimes. And then of course, the radio.

Do you keep an archive of your work? And does archiving matter to you?

Yes, it's a really bad thing. I'm very bad in keeping an archive, but it matters a lot. But on one hand, I can't be bothered, although I think it's really important. Well,

Why is it important? Why should people archive?

Oh, you know, I, at home, I have a big archive, but just put it in boxes somewhere. And maybe if I'm 80, I have the time and energy, probably not to check it out. So it's a personal thing. And in general, I think it's really good to keep stuff. Radio, it happens so much. And it's really a time-based art that very much depends on the moment that you are doing it, that you get crazy. Even like, Radio WORM exists now for almost three years in this form, it existed before in another form. And I think we have a few terabytes with stuff, which is not even half of what was being broadcasted. So try to archive that you get crazy. You are doing it, by the way, in this project.

I hope we can profit from it in some way.

So yeah, I really hope so too. And I don't mind that stuff is being re-

peated. Nobody listens to the radio together at a certain point. So some stuff is so good that you can — doesn't mind if you kind of repeat it. So that's the good thing also about archiving. I think on the contrary, sometimes you need to, it's good to listen to them again, you know —

exactly — yeah —

— well, not again, I think a lot of people also miss the live broadcast. We also have a program at the Concert Center, which is called Dr. Klangendum. This is older than Radio One. And we make one hour of radio art every week. Sometimes stuff that we get from the radio network, sometimes other stuff, sometimes stuff that's being produced here at home, also in the sound studio. The good thing about that is that I don't know how they do it. But they keep it online. So you can still listen to stuff from years ago. And I'm sure the moment it will implode, I think they must have already a million terabytes there, because they do it with every broadcast they do.

So what do you think the relevance of radio is today? Why is radio important today?

I'm not sure if it's important. But I see stuff. Like a radio, I see it as a platform. Like I also see playing a live gig as a platform. I'm also a musician. So in some cases, radio is more interesting to do. Because you just have to listen to it. I organized or played a lot of live concerts that you think okay, they might have sent me the tape. So that's that's one thing that I think okay radio at this moment, it's become very flexible, and small. So maybe even because we just had a zine camp, you can think of an oral zine. People have their thing, maybe between 50 and 100. People listen to it. And that's it. And I think that's really interesting. So it's very easy to start your own radio broadcasts, just pay a little bit of money to a provider and you have it. I think the flexibility is one important thing and also the total freedom that you have, except when you're in an Anglo-Saxon country, because then you cannot say "fuck".

Children are not listening. They're in school now. So, is radio connected also, from what I heard, to the element of liveness of being live in a way?

Yes, it could be. Yeah, for sure.

Is this important? To you, as—

For me personally not, but for a lot of people it is, "yeah, I might as well listen to it later". But I think a lot of people really liked that. That's also the zine element in it. So what we notice in radio, one is that people get good broadcasts, some of them just do it every week, and no big deal about it. But other people, they really promote the broadcast. So their friends are listening exactly at that moment. So you can see that by sort of hours: the listeners are much more than on NLR hours. So that's really that you know, okay, it's a way of coming together. Or, it could even be your friend that lives next door, but then they still listen to your radio show. It's quite funny. It's a way to connect. So, yeah.

So when we are archiving something that was originally created to be broadcasted live, does the feeling change?

Yeah, that's what I said. For me personally, not —

Yeah.

I just like to listen to good stuff. Sometimes I don't have time, but it's very personal thing. And so for me, it doesn't matter. But for some people, it really does. It really has to be the moment in the moment.

(Yeah, we were actually talking about it before with Michael, because we're listening at this at our presentation from zine camp, and Michael said that it's like frozen dinner in a way, because it was live when we were listening to it. So yeah, it is, it can be a different experience.) If

you could change radio itself, how would you change it?

In what way? Changes in a technical way?

I don't know, it could be technical — maybe you would like to add an element to it?

No, I'm not this kind of person.

I can like it as is, well, like, I just take what there is, and use it. So that is for me better than to think, "oh, it should be like this, or this or this or this". Of course, one thing I would like to change is that suddenly Free Emperor of Music would be so popular that we could play in the Ziggo Dome. And then there'll be 50,000 people listening. And if somebody did, that would be, yes, great. But that's, that's more like something totally different, has nothing to do with radio. So it's more like — No, I just don't know.

During live broadcasts, are there errors happening? And would you change them? Or would you keep the errors?

I'm totally an error fan. Also, when I have my program with Vincent, and we are both sound engineers, we always make lots of errors. And we love it.

And would you also choose to archive them? Or would you keep them out of the archive?

Well, the thing is most of the errors are to keep, especially in the beginning of the show. Because you know, some people left the stuff really bad. Like we always use the details. And then you don't check if all the knobs are right, so you want to start and suddenly you notice that "Yeah, there is no bass."Where is the bass" or like, we play records and then shell, but somebody put it on the top speed, and stuff like that.

And then it's really nice to complain about it online. I love that. So, love to fail in a good way.

It's always also productive. You can be creative failure is that —

If you say so, I believe you.

So also spontaneous and spontaneity is always nice.

Yeah. And of course, you know, like it works here in Radio One. People do live radio. And if one program goes to the next one, there is no technician. So you always have these changes. And it means that in the worst case, you have to really change everything. And it takes five minutes to do that. I always love those parts.

Yeah, silences are in silence. It's actually right. Yeah, exactly.

So thank you very much, Lukas. It was very enlightening and very nice.

Okay. Thank you for inviting me. So now Ash is coming. Yes.

(How to enjoy this mix. Step one. Find a comfortable place. Step two relax your body and mind lay down — step three let laser yellow light envelope you — step four ensure your monitor headphone is set up smoothly and finally — step five press play and enjoy — buddy no bridge skies full on with air? The skies found me digging, hiding, guarding. A dream washed —)

Interview II: Ash Kilmartin

This one was a treat since you—

enter back, could you introduce yourself briefly?

Yes. Good morning. My name is Ash Kilmartin. I'm a radio maker here at Worm for three different radio shows. And I'm also on the radio Worm team.

Thank you.

How's that for an introduction?

It's great.

It's efficient.

Yeah, cool.

Definitely.

Does archiving matter to Ash? And if so? Why? Why does it matter? And why do you think people should archive or should not archive? If it doesn't?

You're asking me in my role as a radio maker or as in someone that is behind the operation of radio here?

I would say the duality of those roles is quite interesting. So I would ask you to answer for one and for the other.

Okay. It could be separately, it can be at the same time that's up for you.

I think they both come from the same place, but one, I guess in one role, I feel compelled to do it myself personally as an artist and as a person. And when it comes to helping other people use this platform, I like to encourage a certain kind of archiving, but I don't expect it or enforce it, shall we say? But to answer the question, archiving is super important to me. I don't know how to explain that. I don't know the whys. But to me, I would genuinely say that, to me documenting is important. And archiving is an outcome of documenting things. And an archive, in my sense, could be something very messy, and incomplete and non systematic, or it could be very systematic. When I'm presented with that word, archive, it sounds serious and systematic. But I think that there are many different ways of archiving. And the question would be how, how would I define distinction between archiving and simply documenting and holding documents?

I was just going to ask.

Yeah, that's a great question. I suppose the building of an archive suggests that not only are you holding things, but you're also trying to find ways to be able to access and give other people access to the contents of that collection. And that would be like the simplest possible terms for that.

Rather than documenting is kind of that you don't take those things into consideration as much, or?

Yeah, that's right, the documenting as a practice, and separate as a practice from archiving. And I really, like, I enjoy thinking about it now. But I have to admit, I'm like on the spot, having had no idea this morning, when I got up that we would be discussing it. But I love that.

Maybe as the next question, do you think radio is a good idea?

Think that radio is a great idea?

And if so why? Why do you think radio is good? As an idea, or as a medium? Or as…?

Yeah, yeah, there's so many questions, though, to be able to dig into — they're like, "What is radio in the sense, is what we're doing now radio," because officially not calling Radio One Radio One was a misnomer, because it's not FM radio were it were narrow casting on the internet. But I think "radio" is a really easy term that we can give to that, that makes it make sense to people. What is it? It's us sitting in the studio making audio that can be listened to by people in their own individual spaces on specific devices. So I guess that's radio in a way. What I like about this radio, I think it's a lot easier faster to pinpoint then radio in general, is that it's a fairly accessible platform, in different senses of that word. Radio generally I love, because it can be from a single person making something broadcasting — "broad" being the operative part of that sending something that can be accessed by many different people in many different places. So it can be a one person to like, as an individual, and a collective mode of reception. Really, as I speak, like, every single thing, I think about some, like, "wait, no, there's a contradiction in what I'm saying here." And that needs to be defined and broken down and split into tiny ends of hairs. I like it as a form. I like it as a form because of that, because it can be me or it can be a group of 30 people sending something to, you know, one listener to hundreds of thousands of listeners.

And in your own — maybe this is more related to you as a radio maker — is the element of "liveness" important too. And yeah, I feel like you've answered the other part of this question already a bit, about what your feelings are around archiving something that was originally created to be broadcast live? As in, like, should it remain just live and then not have its afterlife online or, you know, in an archive or something of that sort?

I can answer that one for myself. But I'll try the first part first, which is

live — and it's important — absolutely live. This is important for me as a maker in various forms as a creative constraint. I've made all sorts of different forms of audio, like some live or part live or edited. There's always an aspect of performance involved. There's always the moment when despite any other rehearsal or preparation, you are doing the thing. The thing gets done then and what you hear is the thing being done. And I love that for one of my shows, which is called Ever Widening Circles and I co-host was seen as wonderwell. We will bring in music of various forms. It's audio in various formats. And we won't tell each other really what we've bought. And we do the classic back to back, which is one of us plays one thing, and then the other one plays another thing that tries to make sense — join up speak to the choice of the person that you're playing with. And there's a certain liveness of decision making — there's a liveness, in execution of how well you choose to mix or not mix. So, like, what works, what doesn't work. In other shows which I make, like Dog Earring, which is a discussion show about books, or one on one show with other people who use writing in their work, or in the interviews that I have with other artists or musicians, as part of reports, there's a liveness of the conversation, you don't know how that conversation is going to go. For, like, all of the different factors that are involved, you don't know what other kinds of background noise is going to show up, you don't know what you're going to connect on or not connect on what's going to happen in the space around you. There's always the possibility of technical issues when it comes to recording any kind of audio and broadcasting, audio, all of these unknowns and unexpected things that as an artist, I find really exciting, because I'm quite a planner. And so these are the things that I can't control, and that I can't have to collaborate with. And that's useful as a creative constraint to be able to say, well, you know, here are the things that I didn't come up with, but I worked with them, I did something with them at the time. And that's one of the best parts. So I really love that there is always an element of liveness. And I do want that to be retained, even when the show was not simply made and broadcast live. So in edited shows, or like more composed, more collated audio things, whether

that's an interview show with musical interludes or something more of a mix that's completely pre-recorded. There, there still has to be a record of decisions being carried out in the moment.

So would you say that you have a preference of liveness being archived in an unedited way, or kind of in the form that it was broadcast without kind of taking away those decision making points?

I liked the idea of it, but I still edit some mistakes out of my shows for sure. So I'm not dogmatic about this in any way. Okay. I think there's, there's what happens when you're making it and the impulse and the preferences behind the making? And then if it is something that will be archived, and received later, you think also of what you want that experience to be like for the listener? What is most important? Is it most important that they hear exactly what happened? Or is it most important that the idea was carried through and transferred in the most efficient way, which might mean editing out some feedback, or getting rid of a really long pause or starting a sentence again? So I think there's no, there's no one way to approach that.

And maybe in relation to that, like thinking about the listener? How important is it to give context to the audience about what is happening, or what has happened live.

If it's just a bunch of music that I've been listening to recently, that's all the context that it needs to be an in that way, a lot of the shows that I've made under the title of ever widening circles, either on my own or with Linus in the past two years. If I listen back to those, they're a bit of a journal. And that isn't evident for anybody else. But it's simply when I hear what I did on that evening, in that show, I remember what I was thinking about what I was listening to what I was dealing with at that particular moment in my life. That context doesn't need to be given. I don't care what anybody else thinks about that selection at that moment, really, even if I was preoccupied with it for two days straight

before it happened. However, if I'm doing something that involves, for instance, recently doing a collective reading of a denier, Shipley's book minor detail in the context of the invasion of Gaza, then yeah, that needs context. So it depends on the material.

Makes sense. Maybe for the next question, very, very different atmosphere. If you could change radio itself, how would you change it? Or what would you change about it?

I wouldn't change radio, I would just change the nature of time.

How so?

What I love about the current state of internet broadcasting and radio culture and internet, radio culture, community radio culture, is the lack of — well, mostly lack of — competition. And the idea that it is not about being the biggest or the best, in my opinion, that doesn't really hold anything. For other people, maybe it does, but I think at the heart what is most important about these forms is that they are almost universally available — nothing is universally available. There are many barriers to many people. But there are organizations and platforms for radio making that try to crack that open a little bit. And you can start doing broadcasting from home with very little, you can start building a community around radio making with very little. And that's what I love about it: A sense of community — when I traveled to other stations, a bit like WORM or similar community broadcast as an internet broadcast — around Europe, that I've been to recently. There is an interest in connection, and comparing how to do things and like there's not a question of why everybody knows why you do it, you do it because you get so much energy from it, and you love doing it. And that's clear. And so it's like zine making, like I always enjoy coming to zine camp and just seeing like, here's a bunch of people in the room. Some of them are already friends, some of them were strangers, but we'll be friends from now on, you just have to have this one thing in

common, and it builds something beautiful. So that's something that I think shouldn't change about radio. I love that about radio. What it does mean is that, and this is why I say I want to change the nature of time is that it means that there is so much great material to listen to and listening is slow. Or I think it should be slow. And that means that there is never enough time in a single life to listen to even the things that got produced this week that you want to hear and pay attention to in the way it deserves attention. So what I want to change about radio is just the nature of time and the passing of my life too fast.

And maybe to circle back to the question of archiving and errors, and editing. What are some of the errors that you experienced as a radio maker? And do you choose to do something with them?

I think on a technical, like, gear operating level, and a sort of, like, 101 audio engineering level, there's plenty of things all the time. But it's important to me as an artist that I don't let those things catch me up too much. I don't want to get hung up on those or allow any kind of perfectionism to stop me from making things. And I have to say that for me, it's been easier to do that in making radio than in any other format that I've been working with since I started doing art. And one of the things I love about being here as someone that's not only a radio maker, but but on the team is to be able to try and share that motivation with other people to say like, yeah, you might walk in and look at all this gear and be a bit put off. But like, honestly, if I can work this out, then there's a very good chance that anybody can. So there's small things about your levels. And like, you know, what, how do you record something? Well, when you're out in the field, and those things, of course, I would always like to do better and try and learn from every time I do it. But it's not as important to me as figuring out how to do better interviews with people how to ask better questions, how to have a better conversation. How to think more about what, what a show should be like for the listener to want to hear the whole thing. So those are questions of content and composition, rather than technical questions. So when I think of error, I

think of like, bad questions that I might have asked someone, I think of not putting the conditions for a good conversation, or a good back to back session, like not putting those conditions into play before we start doing the thing. And I think those are much bigger or more serious areas for me personally, than anything technical.

Yeah.

And yeah, those things can't be edited out. You hear them. If you're listening, you hear those things. And maybe less if you didn't make it, but it's still there. Yeah.

And maybe when you talk about context, could you expand for me? What do you want to achieve with your broadcasts? And of course, here you do many different shows. So if you want you can focus on only one or answer for all of them.

What do I want to achieve?

Yeah, it's a big one.

So yeah, even with, like, one specific show there. There are many answers to that. I think the main things across all of the shows that I make is, like, wanting to have a good time, which can be many things. It's not only fun, but it's also, like, having a satisfying experience doing something. And sometimes that's difficult because sometimes you're learning while you're doing it and that's what you wanted to achieve, to figure out how to do something or do it better. And one of the other aims is to figure out how and why people work. Which comes down to the interviews mostly or speaking with people about what they make, or about how they make, why they make, or about anything else. Like, one of my favorite interviews was speaking with the musician about, like, which animal meme accounts they follow on Instagram. It was just really enjoyable. And I just like to understand that as a human, how

other humans who make things work and what making does for them. So I guess those are the two big aims, is one, to enjoy myself. Because there's a lot of pressure as an artist and as a freelancer, that you're always doing something really effective and achieving something and here's publicly my outcome, and look how great I am. And I think so many of us just, like, hate this charade, part of what we do, because it's not the thing that drives us to make things mostly. But I want to enjoy whatever I'm doing. Otherwise, like, why would I put myself in these precarious conditions where, like, I'm doing everything. As much as you know, for myself more than anybody else's. It's always a community effort. Of course, like, no one is truly a solo project. But you have to do so much for yourself to hold this kind of life together. And so of course, like, I have to prioritize pleasure as part of that, and enjoying what I do is very important. So there's a long way of saying what the two ends are.

And if I could ask as a kind of sub-question of understanding why people make certain things in what they do is, then would you see that that's also connected to the community effort of also allowing space for radio as well? Do you connect that to, you know, the part of you that makes really are also the kind of infrastructural part that organizes radio as well?

Yeah, I do find it fascinating that like, I deal with so many people who make shows and some in a really close way, like some people involve me really, like strongly and frequently in their making here and other people less so like that, like, they would like me to stop emailing them saying, like, are you coming to your show this week? And they all have really different motivations. And it still fascinates me when I hear people shows or speak with them, or contact them, like, why do you do this? And it's not a negative question. I had a great conversation recently with an artist who had been on the show with an artist collective that they are part of, and they said afterwards, like, why do people do this? And they didn't mean it in a negative way. But their collective mate

had, like, thoroughly enjoyed themselves in the show that they've died together. And it's like, it's because you get energy. People do this because you get energy. But it's still a question for me, not a negative one. But they go "Yeah, why? Why do you, why do people do this? Why do they like to do it? Why do they keep coming back?" Always like, and as an organizer, so as a radio maker, I totally get it. Because I have these broad overreaching aims of enjoying myself, and connecting with other people. And then as an organizer, it's a cycle. So figuring out, what do you like about this? And like, can we help? How can we do it better? How can we do it more together?

Thank you so much.

Thanks for the questions.

And thank you for taking the time to answer us in such a busy day. But I guess that's also the, yeah, unpredictable atmosphere of lightness and warmth and all these things.

Exactly. And I'm really looking forward to hearing what you all have discovered, developed, figured out and preferences for preferences against about radio making and archiving and how those two things work together. So, understand there's not too much to talk about, but I'm really really looking forward to hearing that from you.

Thank you.

Interview III: Lieuwe Zelle

Thank you for being with us today. Could you introduce yourself briefly?

My name is Lieuwe Zelle, and I'm founder of Radio WORM. Just a short period before Corona, we started with the Radio. And, of course, through Corona radio grew extensively. And now we're busy to hold on to the audience we have but also to the radio makers we have.

Does archiving matter to you? And why do you think we should archive or you should archive?

Well, it was a problem from the beginning to do this, because we didn't have really possibilities to do so, because there was no budget to buy hard disks or to buy any other stuff or going even into the cloud or whatever. So that was a major problem of doing this. And at the moment, the only thing I'm doing is all the double things, remove the double things and remove the things we don't need. So that is a still ongoing process. But yeah, that was just made in private, I just asked with Lucas together, our director, if we could buy some hard discs, to finally do some archiving, to finally to do some projects with everything we have in stock, because there is a lot. And I think we have to do something with it, making postcards out of it or put it on Mixcloud or book it on. Whatever, Spotify.

Thank you. Do you think radio is a good idea?

Yeah.

Why?

Well, actually, it's quite simple. You can listen to the radio or podcasts while you're chopping your vegetables, while watching YouTube

or Vimeo or television is not that easy, when you must protect your fingers against chopping. So not saying that, but that is not the main reason. The main reason is that radio is, again an upcoming thing. And also podcasts because for me radio and podcasts are related in the sense that it is audio. And working with audio is an interesting thing — I do both actually, I also make videos. But the major thing I do at the moment, for instance for myself, is making the sound experience, basically sound effects noise, that kind of thing. That is audio and radio is — is audio. I mean, you can do a lot on radio. And it's also more forgivable, it's more forgiving than video or television. So I mean, when you make a mistake on the radio, it seems that it's not that harmful than when you do it on video or a picture. So that's my opinion, by the way, but it's not necessarily true, but it is my opinion and radio is also very interesting when you talk in bigger groups for instance, so not only single podcasts or making a program for yourself but also making program with a group or with a community or do interviews with a group and a community and that kind of thing. So that's audio. And the other thing is, it is more easy for audio to keep being in the picture, to speak to say, dear joy. Because let you say radio and podcasts have a longer life than documentaries, video documentaries. I was in 1994 — I was in Palestinian areas as an assistant filmmaker. This documentary is put on the Belgian television and Dutch television with the VPRO — after that nobody ever seen the documentary again or heard about it. So. But if you have audio to sell things — the first YouTube video is still available. So, I mean.

Is the element of liveness that goes about radio important to you?

Well, you mean a live radio show.

Yeah, yeah.

Yeah. Okay. Well, like, radio show can be a live radio show here in the studio. But a live radio show for me is also when you work, let's say with

a group making pre-recorded thing, because it also has the feel of a live program. So it's also possible to make a conversation or to make a story or whatever, within a group, and then record it and put it on a later date on the radio, or as a podcast. So, but it gets the feeling of a live program. So the feeling of live program is important. Yes, but it does not have to be necessarily on that moment.

And regarding this as well, what are your feelings around archiving something that was originally created to be broadcasted live?

Well, you know, everything in live should be archived. I mean, my family has a very interesting history with several, let's say, in some communities, known people, very known people in Friesland, for instance. So and that those things are archives and I can find things back of my family in the historic center in a word. And so all those even maybe not that important things are archived. So I can research my own family, and learn to know about things I didn't know before about my family. So even normal things in live should be archives, that okay, I understand that this problem to archive the whole world population, but okay, but as an idea, it's maybe there.

Definitely. And also, when archiving, do you — How important do you think it is to give context to the audience about what it is that you are archiving?

Yes, it's important, and that's why you have a specialized job. For instance, well, last year, it was in the historic center in Lebanon. But I don't know exactly where to start searching. Because that's, that's the thing. But there are volunteers who are former — people who work in the archive, who will give assistance for people who are searching for certain things, but also the relationship. And even in mistakes in the archive, they can explain how to look for things. Because sometimes you think you'll find two different persons but turns out it's the same person, but they made a mistake in the date or the American made

a mistake somewhere. So if you search deeper than you realize that this should be, must be the same person. But you learn this from an experienced person who works in the archive.

Thank you. A bonus question is, if you could change radio itself, how would you change it?

Here or in common?

I think in general, it's open to your interpretation.

Well, I think that my opinion is that there is too much music, radio, and only music, radio and talking about serious things on the radio — or not necessarily need to be serious, but communication on the radio, radio plays, storytelling, poetry, and that kind of thing. It's, I don't, I've seen not enough on the radio. So I think, like, what we do here, we've worked, for instance, the concert center, we make programs for the concert center. And it is always love to say art radio, art related, or discretion related or subject related, combined with music or other funny stuff. But the main thing is that we try to communicate something. Last thing I did was a conversation between a person who makes music here at WORM, and she is more or less a transgender person, and myself. And I'm also more or less, in terms of the person. And we had a discussion as mother and daughter, about sex, transgender and all those subjects, completed with some interesting music composed by her. So I mean, you can have a serious talk about this subject. But in the meantime, you have also some poetry music, you have some electronic music, you have some. So it could be, in total, an interesting thing. But it is not necessarily only music, it's the total, the total story you tell.

Okay, thank you. Going a little bit back on the question of being live on radio, you know that very frequently, you also touched on it a little bit. Are there errors? And what are the errors to you? And do you choose to archive them? Do you think it's important to archived our errors?

In our type of radio, there are no errors.

Okay.

Errors belong to the domain, in the sense that we are doing errors, mistakes, or whatever you want to call it — belong to the, to the way we make radio, that don't have to be perfect, we are not paid millions a year to make perfect radio, we are here as volunteers, we are here as people who want to express themselves for whatever reason. So, everything is allowed more or less. Of course, it has to be non-discriminative or non-, you know, but on the other hand errors are there to be as it is, in the development of a person making radio for the first time or whatever.

Okay. And final question for today. What do you want to achieve with your broadcasts?

What I want to achieve is to be an alternative radio for literature, to commercial radio, because everything can be done, you're here as well. So I mean, it's a possibility for you to be here. Because, yeah, we are open for anything. So I think that's the most important thing to achieve, that we have this form of radio, or making podcasts or whatever you want to call it. To achieve independent radio, to achieve independent programs, but also for people to express themselves. And for even some, for some people, radio is also part of the growth of their career in performance art or whatever they are doing. So there are people here at WORM, who used their programs as a platform. And as a result of that they are performing now on stage because they used to radiate warmth as their platform to get their performance out there.

Thank you so much for your time. Yeah.

Okay. Thank you

See you next time.

Interview IV: Florian Cramer

Thank you so much for joining us today. Could you introduce yourself?

Yes. Hello, my name is Florian Cramer. I'm wearing several hats. But one of the hats that I'm wearing is this. I'm also a radio maker at Radio WORM.

I would like to ask you, why do you think that archiving matters? Why do you archive?

Just a second, the microphones...

I'd like to ask you if you think that archiving matters? Why do you archive? Or why should you archive?

I think archiving matters in order not to reinvent the wheel. And also to have a kind of consciousness of the field you're working in. So, for example, if you're talking about experimental radio, there is a rich history that actually goes back to the very beginnings of the medium and the early 20th century with for example, experimental radio plays that were produced already in the 1930s. And up to the history of experimental music that had its main stage, for example, earlier electronic music at its main stage on the radio and not in concert halls. Essayistic programs, even if you look at the history of 20th century philosophy, it's actually quite amazing how much of that were originally radio speeches by people like Hannah Arendt or Adorno and others. So archiving that, of course, is just as important as, for example, archiving books and libraries or archiving records, archiving films. I think there's the same kind of collective duty you could say, of doing this as a cultural memory, as something that then also can be reactivated can be reused, can be learned from. And with radio, of course, this is more difficult, because, for example, if you're making a book, then it's already its own archival

format. But radio, by definition is not an archival format. So that has been a problem of the medium from the beginning on.

So in regard to this, do you think radio is a good idea? And why? You could elaborate on that?

Yeah. I think I actually have mixed feelings about that, which is maybe weird to say, as a radio maker. So Well, first of all, you could ask yourself, you know, isn't radio something obsolete? Because in the time when I grew up, before the internet, I know that there was even — it was a binary question, either you send something over radio, or you produce a record or a tape, right, and that would be expensive. And nowadays with digital platforms, with internet technology, we no longer have that kind of necessity. We have much more fluidity between, you know, the published archival format and the streaming format. And if you look, for example, at big sound archives, such as, for example, PennSound for poetry, or we have a lot of interesting [— we have a lot of sound interference. I don't know where it's coming from. But is it coming in from outside maybe we should tell people that it's a bit difficult to concentrate. Okay, yep, there, they are a little bit.] So we have these public sound archives. So UbuWeb is also really a great example. If you go into web sound, then you can say, "Okay", actually, no, this, "to which degree is it still necessary to send anything of that of a radio?" And also, I think that mainstream radio has become a completely obnoxious and annoying medium. So if you just turn on the radio, yeah, it's terrible. I mean, it's there's almost no medium, which has been so mainstream and formatted to death as radio. But I think on the positive side, radio has this improvisational character, also this weird character. I mean, even something like, you know, where you can also have political question marks, like, if you go to America, and you have talk radio, and you have the people who believe that we are all controlled by Martians, and they spend the whole day rambling into the microphone, I mean, that has a certain performative quality. And that will be sanitized, if it only will be available in an archive format. So I think, yes, also, the idea that

it's completely low threshold, that is just something you can turn on, it doesn't require any literacy, I think there's no other medium that requires so little technology and literacy as radio. So also setting up even, even if you don't use internet technology, for example, if you use a simple kind of medium wave or shortwave technology, or ham radio or something like this, it's I guess, you know, I'm obviously a little bit apocalyptic. If we have the collapse of civilization and infrastructures and where you will be the last thing that will still be running, I'm pretty, pretty sure of that.

Speaking about this performative aspect, is the element of liveness important to you?

Yes and no. I think radio for me personally, also, when I grew up as a teenager, radio had a really important function to listen to, for example, experimental radio, music programs, or to radio play programs, some poetry programs. And that might, although you could say this — this is not being relativized — about anything that's available online, that there is still the element of surprise, because on the radio you don't have to actively search for something. It is something you can suddenly listen to, something you tune into a station, there's something that you didn't expect, or that you weren't even aware of, and that you discover through this. So it's a form of serendipity. I think that is enabled through this low threshold streaming medium.

I feel like you've answered the following question, but maybe we can extend what are your feelings around archiving something that was originally created to be broadcasted live?

I think that's not an issue at all, I think, yeah, that that should be done. And you can also ask yourself, to which degree is a live broadcast video live broadcast, I would say live broadcast always has some hybrid form. So right now, for example, we are also playing some pre-recorded things. Live broadcasts can also be simulated. For example, if you just

repeat what we're now doing when doing a recording of this at the moment, so if you would just play it back a week later, would it still be a live broadcast? Yeah, yes. So I think maybe radio is exactly about experimenting with with this fluidity is between what is archived and what is not archived. What is life and non-life?

Yeah. And therefore, how important is to give the context to the audience?

You mean, to explain how this been made? Or, well, which context?

While broadcasting.

You know, radio, radio can also be fake, where you can also be fictional. A really famous example is Orson Welles radio play The War of the Worlds, where people thought they were actually listening to a kind of light left journalistic broadcast of a Martian invasion, it was actually an adaptation of a novel of science fiction by HG Wells. But awesome, Orson Welles produced it in such a way that people didn't think it was fictional, but that it's actually that they hear reporters who are just witnessing the landing of UFOs. So that's an element that radio can use. And then you don't give context, right? So sometimes it can also be a method to kind of not give context.

If you could change anything about radio, like, would you change it? If you could change radio itself, how would you change it?

Yeah, I probably wouldn't change it on a technological level. So keeping the simplicity, although you could argue maybe we need some technology that kind of does away with this barrier that we now have between FM/AM shortwave analog radio. And on the other hand, internet streaming radio, maybe it would be very desirable to kind of open up these frequencies and not having the whole kind of independent radio infrastructure being dependent on internet streaming. That's maybe

something to change, you know, just revoke all the licenses of commercial radio stations. But probably very unrealistic dreams. And opening it up to community stations, you know, radically de-commercializes the medium. That would be maybe one thing that could be changed. Otherwise, I think, I must say that personally, I can only tolerate radio to a certain degree. I mean, I'm not a person who could listen to radio the whole day, or even for many hours, because it's too much that it's — it's overkill. So I don't know, maybe it would also be a utopian moment to say on radio can also have silence, you don't need to have the constant chatter on it.

I was also wondering, when some errors ocure during, like, live performance? Do you later on decide to try to choose to archive them?

Of course, you should. Yeah, I mean, that's the charm of the medium right at that. It's not, like — that it's not fully pre-produced, that it's not completely sound edited et cetera, et cetera, et cetera, to keep all the glitches, and then we have multiple glitches and problems here, for example, the sound levels, etc, with noise around us. And that's part of it. I mean, that's, that's actually what makes it live and also has an element of indeterminacy. You could say.

I also have one more question. What do you want to achieve with your broadcast?

Yeah, that's a good one. I mean, I say, I didn't even approach my own programming here in Radio One. But that question — because it was just Lukas who said — yeah, it was when Radio One started. In the pandemic he said, "yeah, don't you want to come by and do something on a Friday", and I said "Yes". And then suddenly I realized that he didn't mean I just come by to make one programming on this one day, but his intention was that I do it every week. And since since then, I'm, I'm the prisoner. And since then, I think more than two and a half years, I've been broadcasting. And in my case, it's mostly, like, my program

is called Mixed Business, because it is actually inspired by Australian convenience stores, they have this name "mixed business", which I find very, very charming, very, very appealing. So I took photographs of that. And the photograph is also the logo of this, this broadcast. And that also means it's an open format. It's really undetermined. It can be anything. But sometimes it's also conversations. So, for example, I also have a life as a political activist. Sometimes I invite other activists into the radio, when something happened, like elections, for example. And we talk about that — but in most of the cases is actually sharing my own archive. Yeah, I'm like a maniac collector, and especially also of obscure, sound experimental stuff, among others also have scenes and books and what have you, etc. So there's almost always every week something where I think okay, that's actually no, that's, that's something that I could broadcast that would be interesting to do. Often, also, it has been paid me in a little hobby of mine to dig into histories of more obscure experimental music and sound art production here in the Netherlands, because a lot, you know, was published only informally on tapes, and then cassette tapes in the 1980s and 1990s. And nobody knows this stuff anymore. And I still have it somewhere. So as an mp3 web, downloaded from some obscure block, and then I thought, "Okay, actually, it fits". That's not something that is worth playing. So, in that sense, it also has a kind of archival function. My own program has a little bit of an archival function.

Yeah, I wanted to ask you to elaborate on this a bit more and ask to what extent would you archive your show for your audience, and to what extent you archived it for yourself.

Actually, I archived everything. So I do not leave everything here on our choice, because they have limited capacities. But at home, I have a complete archive of all the programs, I think almost all the programs. So, yeah, I hope actually that the archival infrastructure here at Radio WORM improves, I also distrust any cloud services. So I don't subscribe to things like Mixcloud, or streaming services. I'm against that, I think

you should run your own platforms. And I hope that WORM eventually finds the solution. Of course, the problem is always maintenance, you know, with any kind of platform you create, especially also we have a self created platform, the problem is never to create it but the problem is to maintain it on the long run. And that is always a problem. I know that, so I think it's always a good idea to not rely on certain decentralization, but also archive your own stuff to something like decentral archiving. So, for example, a solution could also be that you ask listeners of Radio One to know to record and archive things they find worthwhile listening, and they create a distributed archive. I mean, that's been my experience, because I was a teenager in the 1980s. And as I mentioned, there was this enormous culture of DIY cassette recording culture, not in the sense of, you know, mixtapes, or people recording music from the radio, but actually like underground music, that wasn't big enough to make it to record labels, not even to any record label. So people self-publish it on cassettes — especially in the Netherlands it was a huge thing. For example, stop plot and other shops and labels, published on cassettes. And what you see is, because these cassettes were normally, like, published in editions between 10 and 100, copied by people, and then what Xerox covers, etc, and then semi-informally distributed, but there are enough people who kept them. And what happened in the last 15 years is that suddenly, there were blocks and people were then ripping these tapes and republishing them as mp3 files on blogs. And then these blogs used all kinds of cloud platforms, you know, like these, these file transfer schemes that also collapsed and went out of business. And suddenly, you can no longer access the mp3 files on the blocks. But people have downloaded the mp3 files, or they still have the tapes. So it's somewhere out there and somehow gets repurposed or when it's necessary, it gets reactivated or republished in some other medium. And maybe that's a form of — you could call it maybe folk archiving, or unplanned decentral folkloristic archiving, that it's never reliable, but maybe is very resilient in its own way. And that could be an alternative to always, you know, having the solution, having the platform, having the right hard drive that has enough capacity, etc,

etc. But then somebody drops a hard drive. And there's no back up. You know, I, I've experienced that so many times. One of the first things, for example — the first kind of community ran internet platforms before the commercialization of the internet happened in a big scale, before social media came up — were the so-called Digital City initiatives. there was one Sudden Amsterdam, a Digital Stad Amsterdam, and then also friends of mine, were also running one in Berlin called International City, Berlin, and it was all on one hard drive. And this hard drive crashed and there wasn't backup. And now this is already back then, everything was lost of his community survey. And I think, Yeah, that happens again and again. So I think it's, it's good to think of, of non-standard solutions or non-standard cultural approaches, I think it's more — it's always wrong to expect that you have a technological solution for them that solves this problem for you. But you actually need something like a sharing culture. Sharing is caring. And really, in the sense of people who value these things and keep them and then pass them along whenever there's a good opportunity.

Thank you so much for sharing your thoughts.

Epilogue

The apocalypse is an editorial space. On the basis of a pending catastrophe we are called to decide upon the relevance of archives in the future and make choices based on our informed judgement and the needs that we imagine we as individuals but also a future society will have in order to (re)build itself.

In the post-apocalyptic narrative, the sense of community fostered by radio making becomes fundamental for survival. Archival practices and protocols are shaped under the imperative of resource scarcity, and archival elements are chosen based on their capacity to be sustainably activated by collaborating members of an emerging community. The apocalypse is not necessarily seen as a frustrating end of things but as an opportunity for a clean start upon the ruins of what might have been good at parts but was also essentially burdening us with its insufferable weight.

Appendix

Fragmented Tools

By Rosa and Riviera

In case you do have internet access (or once the internet is restored) and in the face of the next inevitable apocalypse, you will need essential tools and protocols that are vital to the continuation of broadcasting via online radio without the help of “big tech”, which for sure will not survive the event. The following toolset aims to provide this alternative, and is based on Radio WORM’s current method of creating and sharing their broadcasts.

Voice2Fragments

Create transcripts and add text based information to the broadcast, using etherpad and a greasemonkey script.

1. Create an etherpad in Firefox starting with a URL of the broadcasted file
2. Include the Greasemonkey script and click on the URL to start playback
3. Press CTRL+Down to include a MediaFragment timecode
4. Write your caption

https://hub.xpub.nl/chopchop/etherpad_mediafragments_xpub/etherpad_mediafragments_xpub.user.js

Archive2u

Listen to elements of the archive using this previewer. Read transcriptions and navigate the playback based on set chapters. Download the folder via ChopChop and place it on your own server.

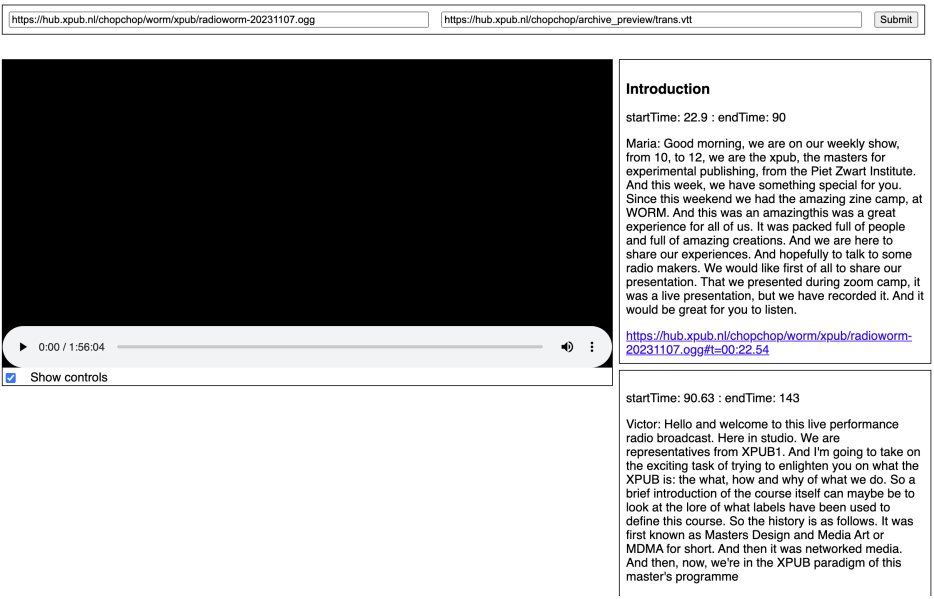

archive2u preview

https://hub.xpub.nl/chopchop/archive_preview/

Mixcloud2Archive

!!Do this BEFORE the apocalypse!! Download a copy of this tool and run `python3 mixcloud2archive.py` to grab a copy of all Radio Worms information on mixcloud.

https://hub.xpub.nl/chopchop/fragmented-tools/mixcloud2archive.py/

Fragments2VTT

Translate your created transcripts into WebVTT files to allow for playback trough a web interface. Download Fragments2VTT

https://hub.xpub.nl/chopchop/fragmented-tools/fragments2vtt.sh

1. run `curl [URL to your pad]/export/txt > sample.fm`
2. run `sh fm2vtt.sh -i sample.fm -o output.vtt`

Fragments2Zine

Grab your copy of the tool and run `sh fragments2zine.sh [URL to pad] [URL to stylesheet(optional)]`, to generate your own publication from your transcription. If no stylesheet is provided, the stylesheet is used that was created collectively during Zinecamp 2023 at WORM.

https://hub.xpub.nl/chopchop/fragmented-tools/fragments.py/

Happy internet radio broadcasting!

Archiving Nature: The Case of the Rain Receiver

By Wang and Zuzu

In a post-apocalyptic world, natural archiving can reproduce the feeling of home: an earthly home, which we so often take for granted. Natural archiving becomes then a guide for human beings to connect. The craving for the sounds of the wind, the sea, the rain: How do you interact with these non-human beings? Can you archive nature's language?

If you were asked to interview the rain or the wind, what would you ask?

Write down your questions on paper, and let the paper interact with the element you pose your question to: Let the rain wet the paper, diffuse the ink and obscure your writing, let your paper free in the wind, to be carried away by it and bring your question to unknown places. The answer will find its way back to you. But in what form will it come? How will you understand nature's language? How will you establish a dialogue, once the initial connection is achieved?

Maybe you can try building a rain receiver in order to analyze the language of nature: A device that will receive the rain's frequency and turn it into sounds. Rain receivers can be strategically placed in spaces like WORM, where survivors gather in search of community. There, rain receivers can act as a symbolic nexus between human and natural elements, free from the commodity attributes of a one-directional society, where the emotional link becomes an important medium for constructing a sense of belonging. This link is reinforced by the sense of touch: an intimate gesture, akin to the act of giving. The survivors hold the receiver and thus become part of an ongoing narrative.

Through this interaction, a cascade of experiences is triggered – a different type of archive is activated: the sound of rain, snippets of stories, and stream-of-consciousness memories collected from the community come forth

On Nothingness, Un-archiving & Loss

By Victor

No archive can withstand eternity. Thus archives inevitably experience loss, and the archived becomes un-archived. While this can feel unpleasant, un-archiving may be more prevalent in archival practices than at first glance. The very act of including an element in an archive, implies that said element could also not be included in the archive.

Let's imagine someone who possesses a smartphone. With this smartphone they like to take pictures, which they like to share with friends to reminisce about 'that one time...'

In this oversimplified scenario, the imagined someone can be understood as an archivist archiving through the process of photographic imagery. Due to physical, sociopolitical and economical limitations related to time and storage, the imagined someone is not able to archive everything. Nor does it make sense for someone to take photographs of absolutely everything with their phone, as all the memories that one would like to access would drown in all the imagery of arbitrary moments. In other words the imagined someone is conscioulsy choosing not to record everything that is not the discrete moments captured.

From this thought experiment it may be suggested that: un-archiving is just as an integral part of archival practices as the act of archiving. A potential question to ask oneself can be – What is the purpose of an archive? – It is important to stress that this question can be approached from a multiplicity of angles, as archival practices are as diverse as winter is long. One possible interpretation of the archive is that it is a space where fragments gain context. Henceforth the parts of the archive emerge in relative structures, in which their value and utility

can be understood in the context of all the other parts. If everything would be included in these relational spaces, one would loose any point of reference, thus rendering the archive useless. The lack of contents is what frames an archive, it is blank space, nothingness, which in turn suggest a silhouette of the archive. Something gives way to nothing in order for particularity to occur.

Loss on the other hand implies something else. Unlike the notion of something or nothing, loss carries a temporal connotation. Something and nothing exist only in space, whilst loss is a testimony of a past of a something transitioning into nothingness. To further explore this concept we can yet again utilize an analogy.

Imagine a someone, again, with a smartphone containing their personal archive of photographic imagery. Said phone one day becomes the unfortunate victim of gravity and in a singular moment the archive is rendered useless.

Yet again the archive is ruled by physical, sociopolitical and economical limitations and all its contents become nothing. Not only are fundamental operations such as transportation and communication impaired, but also the ability to recall the past is shattered.

The imagined someone is subjected to the partial annihilation of ones own mythos.

This frustrates them, how are they going to share their experience of a tender sunset with mere words? Their mind is doused with brief glimpses of the memories that were supposedly immortalized through the lens. In this moment of loss the imagined someone feels hurt and incomplete, yet there are also notions of relief and excitement. Parts of the past that had held them back now felt a little further away. A fresh start with the potential to grow a new archive, a more careful and intentional one. After all, the most precious moments are not forgotten,

images are only empty mediators of memory and can not compare with lived experiences.

From this thought experiment we can deduct that the experience of loss can offer a moment to step back and reflect on what to hold on to. It opens up for the new and alternative, expanding the liminal between something and nothing, adding another dimension of reference. Therefore we shall reminisce on all that was lost and un-archived, as it intrinsically forms what is and what remains.

Colofon

Technical and Spiritual Manual for Post-Apocalyptic Radio Making
Special Issue 22
Signal Lost: Archive Unzipped
Master in Experimental Publishing 2023
Featuring: Lukas Simonis, Ash Kilmartin, Lieuwe Zelle, Florian Cramer
License: Collective Conditons for Re-Use (https://gitlab.constantvzw.org/unbound/cc4r)